FIBRE TO THE BTS –
IMPROVING NETWORK FLEXIBILITY & ENERGY EFFICIENCY

(Study Paper by FLA Division)

Ram Krishna
Dy. Director General (FLA)
TEC New Delhi, DoT, Govt. of India.
E-mail: ddgfla.tec@gov.in

Mrs. Laxmi
Director (FLA)
TEC New Delhi, DoT, Govt. of India
E-mail: dirngn2.tec@gov.in

Abstract

Over the last few years, the use of fiber optic cable in place of more conventional coaxial cable has become viable in many applications due to advances in analog fiber technology. This paper presents Fiber-to-BTS i.e. Fiber in Base station Applications, a new system for feeding radio frequency (RF) signals from either the base station controller (BSC) or base transceiver station (BTS) directly to the antenna element at the air interface. RF system designers are familiar with the two major limiting characteristics of coaxial cables: the increase in RF loss with frequency and length. This type of system has lower transmission losses and greater power efficiency than current state-of-the-art implementations. Other advantages include fast antenna main beam steering, reduced antenna weight, and reduced susceptibility to RF interference on the feeder network and simplified site installation.

1. Introduction

The enormous increase in cellular telephone usage has created demand, additional network capacity and bandwidth. Cellular network capacity growth is driven by new cell phone functions and services like video streaming, web browsing, email and text messaging.

Base Station Transceivers with greater bandwidth are in demand. Fiber optic links give cost effectiveness, high bandwidth new capacity with more flexibility than copper links. Fiber links make system modifications and future upgrades simpler than would be possible with traditional copper links. It can easily integrate into existing systems enabling gradual roll-out where required. In addition, Fiber features inherent data security and superior reliability in hostile environments.

Fiber-to-BTS eliminates the requirement of bulky feeder cables from the BTS to the antenna, and within the antenna itself, by replacing them with an optical feed.

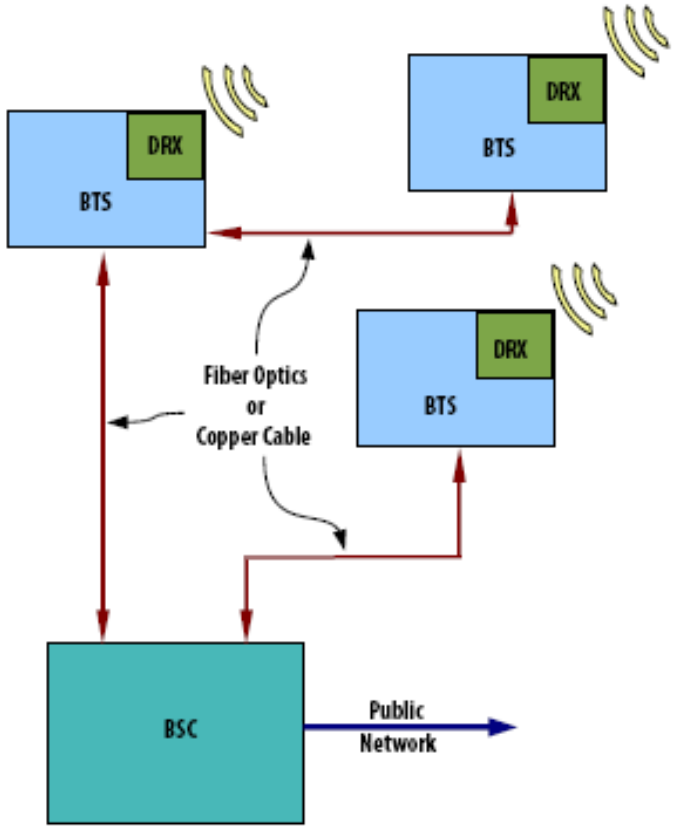

Figure 1. BTS Block Diagram

2. Where does Fiber fit in?

2.1 Fiber from BSC to BTS

The BTS is typically located in a high location, on the top of a building or on a free standing mast, so the antenna has a clear view of the widest possible area for maximum radio coverage. Exact placement of the BTS and associated antennas should be dictated by maximum signal coverage and optimum signal integrity. The BSC can then be located at an accessible location, on the ground or in the basement of the building; such locations allow the BSC to easily access the public network already in place and provides access for maintenance and upgrades of the connection to the public network.

Historically, the BSC has been within a few hundred meters of the BTS and often in a one-to-one relationship. The data rates for communicating between the two have been relatively low. As the need for higher densities of BTS develop and as wireless network

use increases, the need for higher data rates and higher data bandwidth between the BTS and the BSC has become apparent.

With fiber connections, the locations can be selected that optimize the connections of a single BSC with several BTSs; the capability is especially useful with the extra distance made possible by fiber connections as compared to legacy copper connections. Furthermore, the BSC can be located in a more environmentally friendly environment as well as allowing more security for the node that is attaching to the public telecommunication system. Fiber works well as a connection between the BTS and the BSC.

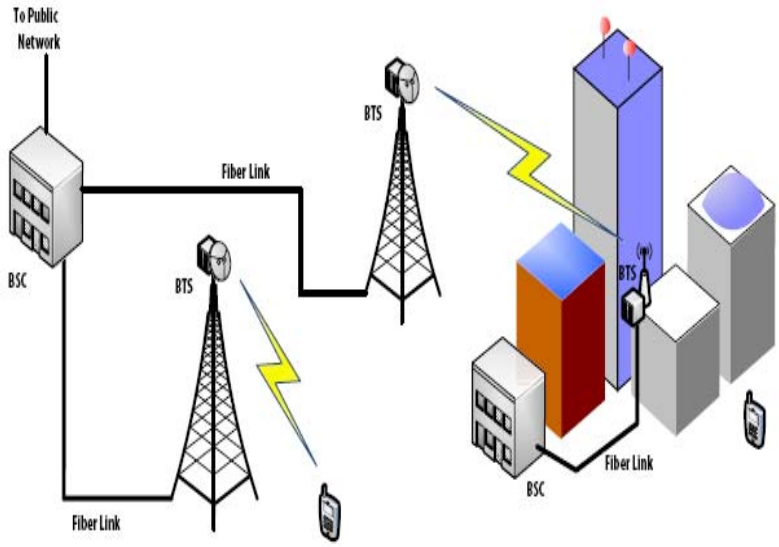

Figure 2. Basestation – Wireless Network

Fiber connections can also be used for the connection from one BTS to another, giving the Base Station system engineer greater design flexibility. Fiber leads to a more flexible and scalable infrastructure.

2.2 Fiber to the antenna

The radio cell sizes of modern mobile communications systems are becoming increasingly smaller due to increasing data rates, higher transmission frequencies and the increase volume of data. Whereas GSM works predominantly in lower frequency bands around 900 MHz, the new systems use the higher available frequency bands at 2.1 GHz, 2.5 GHz and 3.5 GHz. However the propagation losses increase with the square of the frequency, which means that the new systems require smaller radio cells

in order to be able to guarantee equivalent network coverage. Another non system related factor is the increasing number of cell phone subscribers and the constantly increasing volume of data due to new services.

Conventional cellular network architectures with copper wire links between the base station and the cell-site antenna can no longer support this trend in a cost – efficient way and are also no longer competitive. The most modern mobile communication systems now use fiber optics for the link from the base station to the antenna. Base stations of conventional mobile communication systems modulate the data into the allocated frequency band and subsequently power amplify the high frequency signals. These output signals are transmitted via coaxial cables to the antenna which emits the signal into the radio cell. The transmission distance via coaxial cables is limited to less than fifty meters, as the coaxial cables are very prone to losses, which have a negative impact on the radio cell coverage and the data throughput. Generally, a base station supplies 3 to 6 antennas.

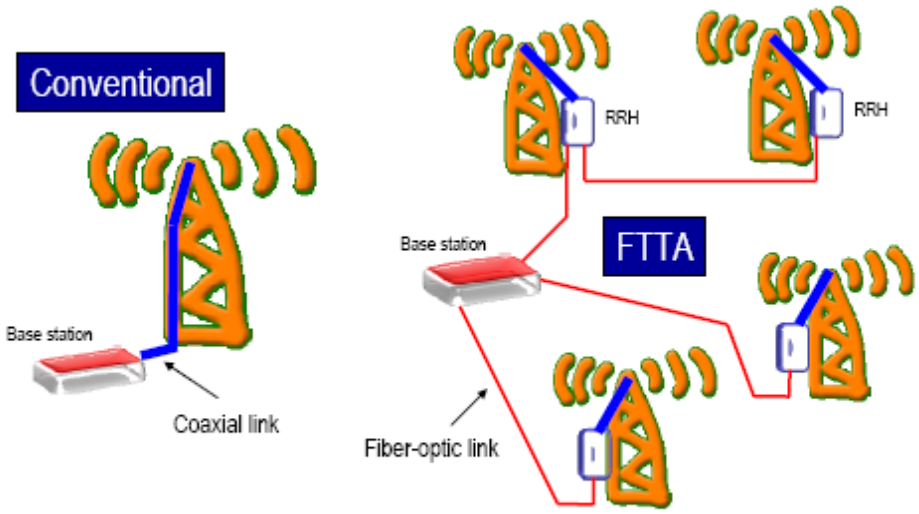

Figure 3: Comparison of conventional mobile communication systems with FTTA systems. .

With Fiber to the Antenna, the entire high frequency and power electronics are taken from the base station and located at a remote-radio head close to the antenna. This remote radio head (RRH) is linked to the base station by fiber optic cables. The entire base station control and the base band signal processing continue to take place in the base station, where the last unit, an SFP transceiver, carries out electro optical data conversion. The optical data is transmitted at typical data rates of one gigabit per second to radio head-end, which converts the optical signal back into an electrical signal by

means of second SFP module, prior to high frequency modulation and final power amplification. The radio frequency is transmitted to antenna via short coaxial cables, so called jumpers, before being emitted from the antenna. Through FTTA systems, the transmission distance can increase between base station and remote radio heads, allowing more innovative network architectures (e.g. chaining of RRHs), and have considerable cost benefits in terms of both installation and operation.

3. Fiber Optic Transceiver

The fiber optic transceiver is a component that transmits and receives a digital optical signal that travels along optical fibers. Optical fiber is essentially an optical waveguide. RF signals exchanged over the fiber network must be digitized and serialized. This is facilitated by the deployment of high speed D/A and A/D converters that allow the digitization of an entire cellular band. The fiber optic link consists of two channels for the so called uplink and downlink which is implemented with single mode or multimode fibers.

4. Advantages of Fiber in BTS

1. The most obvious advantage of a fiber connection over a copper based solution is the elimination of a potentially conducive path between the BTS and BSC. Lightening is commonly drawn to high, conducting antenna structures; with fiber, lightening strike induced system effects are minimized.
2. In addition, potential damage from Electro Static discharge, ESD, is also minimized with fiber.
3. Furthermore, the electromagnetic properties of fiber differ from those of copper. As a result, using fiber for this link reduces the incidence of EMI, Electromagnetic interference. Similarly, the data transmitted along the fiber will not emit any extraneous electromagnetic RF energy.
4. Fiber cabling is more lightweight and takes less space to run, especially when compared to copper links at high data rates.
5. Fiber is transmission energy efficient. By eliminating coaxial cable losses from BTS to the air interface, transmitted power can be reduced by a third while maintain the same EIRP
6. As the data rate increases, system upgrades are generally easier with fiber than with copper cabling. Fiber links can easily handle provides the increased capacity to carry the high bit data rates over long distances

7. Fiber to the BTS can be selectively integrated into any existing cellular infrastructure enabling gradual roll out where required and does not require an upgrade of the BTS
8. With the use of Fiber in BTS, the system has lower transmission losses and greater power efficiencies using 30% to 40% less energy than current state- of –art systems and hence saving power. This is due to fact that fiber optic transceivers have low power requirements less than 1 watt. Furthermore, at higher data rates, increased losses in copper require more power to drive signals, so there is a notable power savings in the fiber optic links. Thus it significantly reduces the power consumption of Radio Access Networks leading to the concept of so called Green Radio.

5. Limitations/challenges of Fiber Optic link

1. One challenge from the perspective of Fiber to the BTS is the location of radio head and fiber optic transceiver in a harsh outdoor environment - especially severe weather at elevated, exposed heights. The components must operate over extreme environmental conditions, over a wider temperature range. The typical BTS application requires a fiber transceiver to operate over a range of 40 degree Celsius to 85 degree Celsius temperature.
2. The power supply to the Transceivers must be stable and noise free in order to maintain error free performance for the data passing through fiber optic link.

6. Future Scenario

Next generation networks are creating a new model to deploy cellular stations by combining fiber optics with current BTS technology. Next Generation networks is splitting the base station, keeping only the necessary pieces in the remote location, and allowing the rest of the BTS to be places in a centralized facility. He two pieces are connected over a fiber optic link. Next Generation Networks is in the business of creating, implementing, and maintain cellular fiber networks. Such an implementation has two major markets, urban areas where metro fiber rings are laid to deploy new capacity and rural/suburban markets where fiber is used to expand the coverage.

The core of the Next Generation architecture will be that a BTS is located in one position, and then optical fiber is used to connect the BTS to a remotely located antenna. The remote antenna is placed at a desired transmission/reception point. For example, to cover a rural village, a BTS can be placed at an edge and fiber used to connect multiple

radios at poles/buildings. Such a topology offers a much more reasonable cost of coverage than placing multiple base stations throughout the village.

In addition to this, cellular sites require backhaul of the voice signals back to MSC. Backhaul costs are significant fraction of overall cellular operating costs, requiring many E-1 links per base station and these data rates will dramatically increase with 3G and 4G networks. By aggregating the backhaul through Fiber in the BTS applications, backhaul, the lower cost/bit of higher bit rate carriers can also be achieved in addition to extremely high backhaul rates.

7. Conclusion

The rapid expansion of wireless telecommunications networks, including cellular phone and data services, measured either by data volume or bandwidth, means fiber optic transmission technology will be a significant part of the future systems. Engineers are becoming more familiar and comfortable with fiber solutions. In addition to filling a niche for more flexible network architecture and usage, several additional advantages arise from the use of fiber connections within Base Station systems, such as EMI resilience and data security.

References

1. *"Fiber Optic Tranceivers in Basestation Applicatuons", white paper by Avago Technologies*
2. *"Fiber to the Antenna, GR No. TEC/GRE/TX/FTA-01/01, Mar-11" by Telecom Engineering Centre, Govt. of India*
3. *"Transmission or WiFi/Cellular/PCS over a common infrastructure", Technology White Paper by Sanjay Mani, Ph.D. Director of R&D, NextG Networks*
4. *"FTTA Fiber-To-The- Antenna-Technology Change in Mobile Communiactions", by Dr. Martin Strasser,Produkt Marketing Manager, HUBER+SUHNER Switzerland*